SOT-89 Package Outline
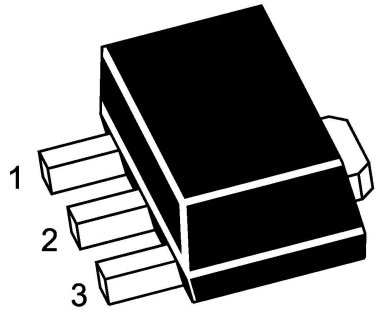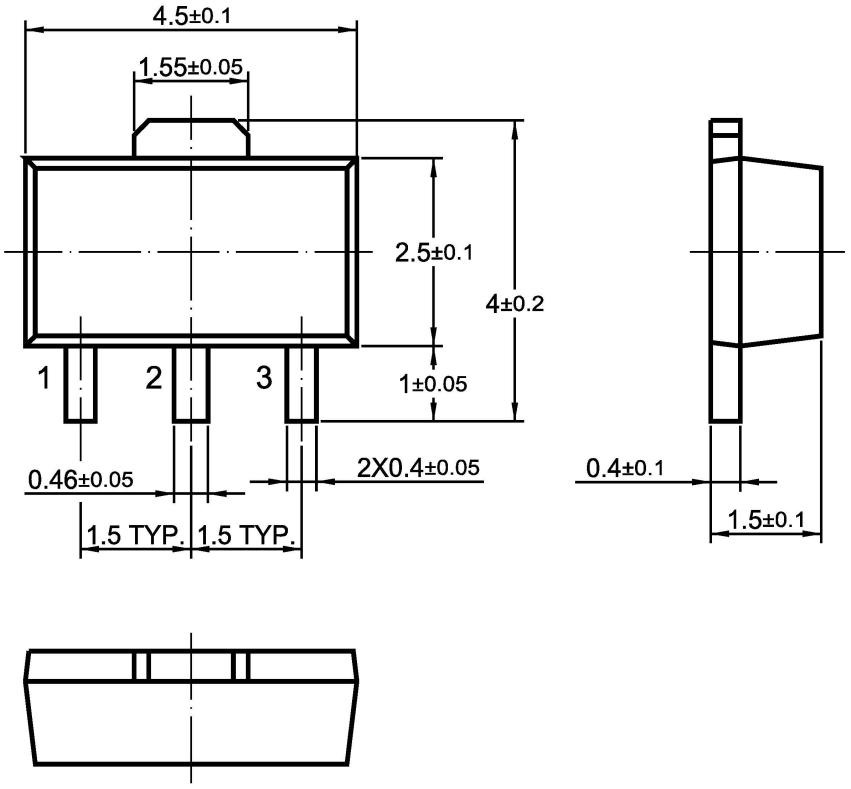
Package Outline Dimensions (Units: mm)