Packaging Specifications of Tube Pack for TO-220

1. The method of packaging and dimension are shown as below figure. (Dimension in mm)

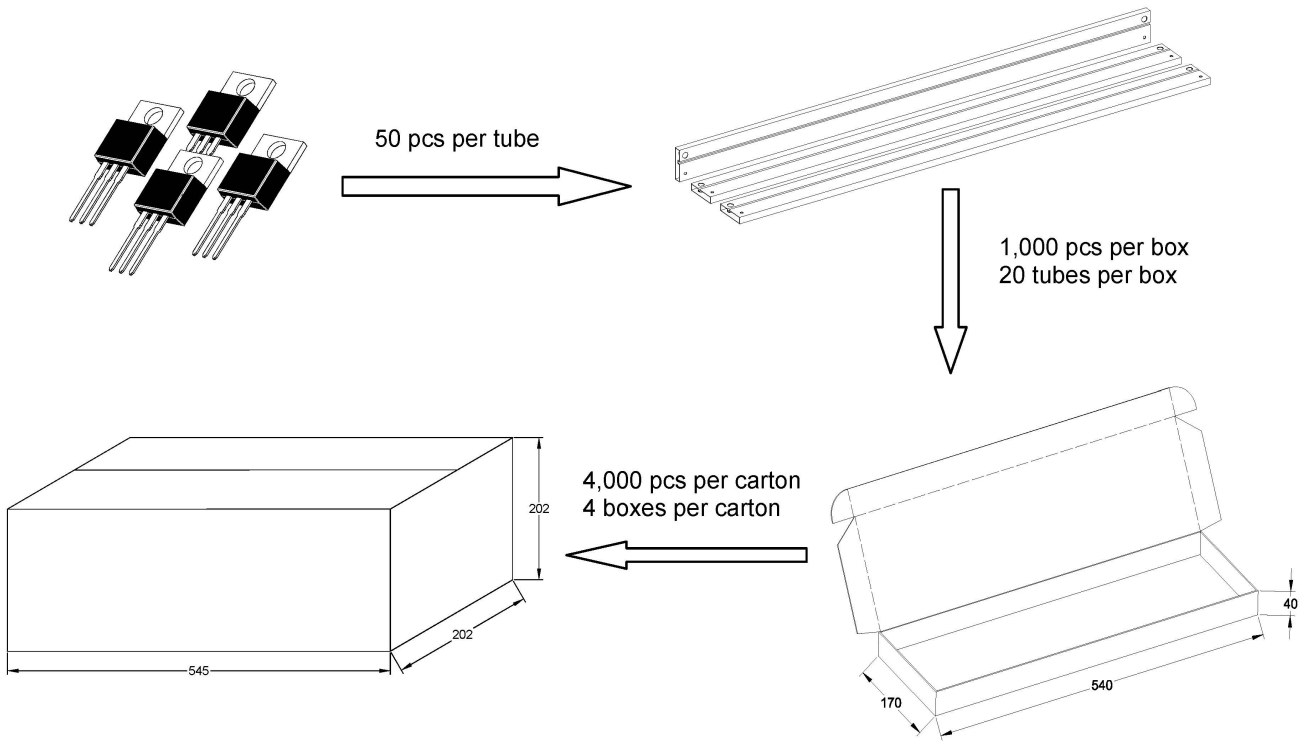
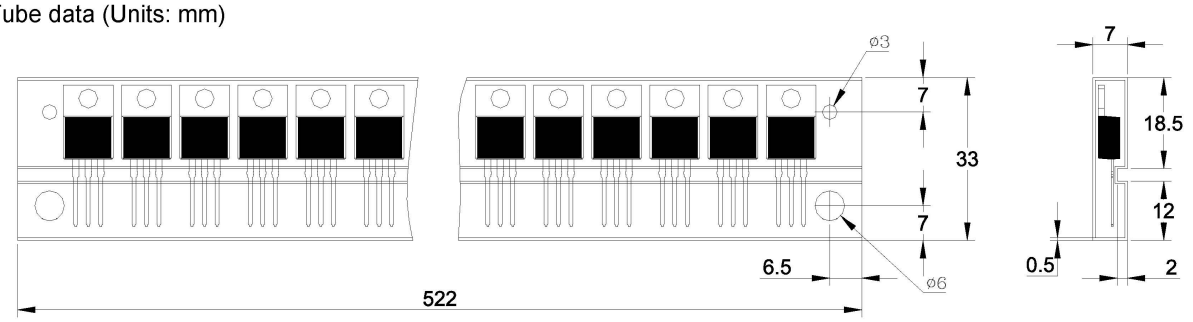
2. Tube data (Units: mm)